Installation of TKS Ice Protection Systems on SOCATA Aircraft

TB20/21 & TB20/21 GT Series

Document 4700INS
Rev 11
30 Nov 2001

Aerospace Systems & Technologies 2000 Ltd.
Medomsley Road
Consett
County Durham
DH8 6SR
United Kingdom
Phone: +1207 582811
Fax: +1207 582812

REVISION RECORD

Issue No	Effective Date	Prepared By
1	10MAY88	TKS
2	02JUNE89	TKS
3	08DECEMBER 89	TKS
4	05 FEBRUARY 90	TKS
5	12 APRIL 90	TKS
6	25 MAR2000	TKS
7	20 AUGUST 90	TKS
8	24 AUGUST 90	TKS
9	22 FEBRUARY 91	AS&T
10	18 APRIL 2000	AS&T
11	30 NOVEMBER 2001	AS&T2000

CONTENTS

SECTION	TITLE	PAGE
-	**Revision Record.**	2
-	**Contents.**	3
1.	**General.**	4
2.	**Preparation of Airframe.**	10
3.	**Installation of Fluid Tank in Baggage Compartment Floor.**	12
4.	**Installation of Equipment Pack Below The Cabin Floor.**	15
5.	**Installation of Proportioning Units and Pipelines.**	16
6.	**Installation of Equipment in Stabilator.**	21
7.	**Installation of Windshield Spray-bars.**	22
8.	**Installation of System Controls, Wiring and Inspection Light.**	23
9.	**Installation of Propeller Ice Protection.**	24
10.	**Pressure Testing of System.**	25
11.	**Installation of Porous Panels.**	26
12.	**Installation of Fuel Tank Vent and Air Intake Ice Shields.**	29
13.	**Checking and Final Assembly.**	30

SECTION 1
GENERAL

1. **Planning Information.**

A. **Effectivity.**
SOCATA TB20/21 & TB20/21GT Series aircraft to be fitted with TKS Ice Protection Kits.

Serial Number range: All serial numbers

Note: TB20 aircraft Serial Number 444 and earlier which do not have SOCATA Modification No 47 (manually operated alternate air door) incorporated, must have this modification fitted concurrent with TKS Modification No 1391.

At Modification No.1436 kits for aircraft with 28-Volt system become available.

B. **Reason.**

To equip the aircraft for flight in icing conditions.

C. **Description.**

Composition of System.

This modification introduces fluid ice protection systems for the wing and empennage aerofoils, the propeller and the windshield, together with certain other ice shields and devices.

The system comprises porous panels fitted to the leading edges of wings, stabilator and vertical stabiliser; a fluid reservoir with remote filler; a metering pump for supplying fluid to the porous panels and propeller; a filter; a distribution system of pipelines valves and proportioning units (flow apportioning devices); propeller protection equipment in the form of a slinger ring, nozzles, tubes and propeller boots (fluid type); a pump, and spray-bars for windshield de-icing; a wing inspection light; a control and indicator panel; shields for fuel tank vents and cabin heat air inlet.

Description and Location of Main Items.

Porous panels are fitted to the protected regions of the aerofoils in the form of "overshoes".

Three panels are fitted to each wing. The two inboard panels span the fuel tanks and are attached primarily by adhesive bonding. Fasteners attach the outermost panels. The right outer panel is riveted to the structure and the left outer panel is attached by screws (to provide access to the stall warning sensor).

One panel is fitted to each side of the stabilator.
(i) TB20/21 two panels are fitted to the vertical stabilizer.
(ii) TB20/21GT one panel is fitted to the vertical stabilizer.

All empennage panels are primarily attached by rivets.

The de-icing fluid is contained in a 7.8 U.S. gallon (29.6 litre) tank located below the left side baggage compartment floor. This tank is filled through a hinged filler panel on the left side of the fuselage, aft of the baggage compartment door. A new access panel is fitted in the fuselage lower skin to provide access for tank installation and maintenance.

The pumps, filter, valves, and drain are supplied assembled on a tray which is mounted below the cabin floor, on the right side, forward of the aileron control rods.

A single proportioning unit is used to supply fluid to both wings and the propeller. This unit is mounted on the diaphragm between the two main landing gear wheel wells. A second proportioning unit for the empennage is mounted on a bracket extending aft of the last fuselage frame. This bracket also carries two low-pressure warning switches, one tapped into each of the tubes which supply fluid to the porous panels fitted to the stabilator.

With the exception of pipelines in the engine compartment, which are stainless steel, plastic pipelines are used throughout the system.

The propeller blades are fitted with grooved rubber boots; these are supplied with fluid by means of a nozzle fixed to the front of the engine, which directs fluid into a slinger ring mounted on the spinner back-plate. The propeller and engine bay items forward of the rear engine baffle are identical with those used for the TKS Propeller De-ice option which is available for this aircraft (SOCATA Optional Equipment No.522). For three bladed aircraft these parts are provided by Hartzell as Anti-Ice Kit p/n. C-4686.

The control panel is mounted to the right of the central pedestal, below the transponder.

D. **Compliance**

RECOMMENDED:
The work outlined does not affect the safety of the aircraft.
The modification may be accomplished at any time, but is more conveniently done during the 100-hour check or annual inspection.

E. **Approval**
Approved by the British Civil Aviation Authority under AAN No. 20026.

F. **Manpower.**

Estimated man-hours: approximately 100 hours.

(Note: Curing period for propeller overshoe adhesive is 36 hours minimum)

G. **Material Availability.**

TKS Modification Kit 4700 is required to accomplish this modification.

Refer to Parts list 4700-PL to determine applicable Variations and Options for ordering purposes.

For TB20 aircraft Serial Number 444 and earlier, which do not have a manually operated alternate air door, a kit to install SOCATA Modification No 47 is required.

For aircraft fitted Hartzell 3-bladed propeller HC-C3YR-1RF/F7693F(B), Hartzell Anti-Ice Kit p/n. C-4686 must be fitted.

Additional material requirements include:

Sealant (151)	Qty.12-6oz cartridges (available as option to kit see 4700-PL)
Isopropyl alcohol	As required
Body Putty	As required
De-ice Fluid	10 U.S. Gallon
1300L adhesive	1 U.S. Pint
Self Adhesive Fabric Tape	Approximately 20 Metres

H. **Tooling**

Special Tools required are:

Adhesive gun	(such as Semco 850)
Clenching Tools for TKS pipeline couplings.	(as detailed in 4700-PL)
Cleco Fasteners	(or equivalent)
Pressure Gauge	0-150 lbf/sq.in. (0-10 bar)

1. **Alternate Air Control**

Manually operated alternate air control (Socata modification no. 47) must be present on TB20 aircraft for the icing clearance conferred by this modification to be valid.

2. **Three-Bladed Propeller**

For aircraft fitted Hartzell 3-bladed propeller HC-C3YR-1RF/F7693F(B), Hartzell as Anti-Ice Kit p/n. C-4686 must be present on for the icing clearance conferred by this modification to be valid.

3. **Weight and Balance**

Weight and balance is affected by the installation of the kit as shown in the following table:

Aircraft weight and balance limitations are unchanged.

Item	Weight (Pound) [kg.]	Arm (inches) [metre]	Moment (pound*inches) [kg*m]
Complete System	(40.6) [18,4]	(74.80) [1,90]	(3037.0) [34.98]
Fluid Tank Contents	(71.8) [32,6]	(109) [2,76]	(7830) [90,26]
TOTAL (WITH TANK FULL)	(112.4) [51,0]		(10867) [125,24]

3. References

A. Drawing 4700-90 Installation of TKS Ice Protection System TB20/21 & TB20/21GT.

Sheet 1 - General Location of Equipment.

Sheet 2 - Fluid System Schematic.

Sheet 3 - Details of Control Panel and Electrical Systems.

Sheet 4 - Installation of Equipment and Pipeline Routing below Cabin Floor.

Sheet 5 - Installation of Windshield Spraybars & Pipeline Route through Cabin Floor.

Sheet 6A - Installation of Equipment in Forward Engine Region and Propeller (2-Bladed).

Sheet 6B - Installation of Equipment in Forward Engine Region and Propeller (3-Bladed).

Sheet 7 - Installation of Equipment in Stabilator and Tailcone.

Sheet 8 - Installation of Reinforcement Structure and Tank in Baggage Compartment Floor. Plan View.

Sheet 9 - Installation of Reinforcement Structure and Tank in Baggage Compartment Floor. Elevations.

Sheet 10A- Installation of Equipment in Engine Bay.

Sheet 10B- Supplementary Instructions for Preparation when TKS Propeller De-icing Installed. (SOCATA Optional Equipment No. 522)

Sheet 11 - Installation of Equipment Pack.

Sheet 12 - Installation of Fuel Tank Vent Ice Shields.

Sheet 13 - Installation of Air Intake Tube.

Sheet 14 - Location of Placards.

Sheet 15 - Installation of Filler Assembly Tube Guide.

Sheet 16 - Installation of Wing Proportioning Unit. (Bracket and Spacers)

Sheet 17 - Installation of Porous Panels.

Sheet 18 - Chordal Location of Panels on Leading Edges and Panel Location on Vertical Stabiliser.

Drawing No. 4765

Drawing No. 4767

Drawing No. 4795-90

B. Drawing No. 4700-PL Parts List for TKS Ice Protection System TB20/21 & TB20/21GT.

C. Instructions for Nylon Coupling Assembly, TKS Procedure 30-09-46

D. De-Icing Fluid - TKS 80 TKS Specification P208

E. SOCATA Maintenance Manual TB20/21 & TB20/21GT Volumes 1 and 2.

F. *Acceptable Methods, Techniques and Practices - Aircraft Inspection and repair, FAA AC43.13-1A

G. *Acceptable Methods, Techniques and Practices – Aircraft Alterations, FAA AC43.13-2A

*Or equivalent National Standards

4. **CAUTIONS**

A. **POROUS PANELS CONTAIN A PLASTIC MEMBRANE, WHICH MAY BE DAMAGED BY CERTAIN SOLVENTS, PARTICULARLY METHYL ETHYL KETONE (MEK), ACETONE, LACQUER THINNER AND OTHER TYPES OF THINNERS AND SOLVENTS. MASK PANELS WHEN PAINTING AIRCRAFT OR WHEN USING SOLVENTS FOR OTHER PURPOSES IN THE PROXIMITY OF THE POROUS PANELS.**

The porous panels may be water washed (using soap or detergent if required) with a brush or lint free cloth. Only the following solvents are permitted for use on porous panels.
Refer also to the aircraft manufacturer's recommendations and instructions for cleaning the aircraft exterior surfaces.

Water (with soaps or detergents), Approved de-icing fluids, Isopropyl alcohol,
Aviation gasoline, Ethyl alcohol, Aviation turbine fuel, Industrial methylated spirit

B. **NYLON PIPELINE CONNECTIONS ARE NOT TO BE SUBJECTED TO TENSION.**

Ensure that the pipeline is not under strain on installation and cut to lengths such that a minimum of 3% (1 inch per 3 feet) [30mm per metre] is allowed for tensioning effects such as thermal shrinkage and airframe flexure.

Assemble Nylon pipeline couplings according to TKS Manual 30-09-46.

C. **VOLTAGE**

Ensure that the equipment fitted is of the correct voltage for the aircraft. The control panel is not voltage sensitive but observe note on wiring diagram.

5. **APPROVED FLUIDS**

De-icing fluids must meet one of the following specifications:

(i) TKS R328 (ii) TKS 80 (iii) DTD 406B

(Fluid to DTD 406B is available under a number of proprietary names e.g.
Aeroshell Compound 07)

Fluids conforming to these specifications may be mixed in the aircraft tank in any proportions.

Automobile anti-freeze fluids should not be used since they may contain additives, which may be harmful to the membranes in the porous panels or to other system components.

CAUTION

UNDER NO CIRCUMSTANCES ARE FLUIDS OTHER THAN THOSE LISTED ABOVE TO BE USED IN THE TKS SYSTEM. SOME FLUIDS CURRENTLY USED FOR DE-ICING PARKED AIRCRAFT CONTAIN THICKENING AGENTS WHICH MAY BLOCK THE TKS SYSTEM. IF IT IS KNOWN OR SUSPECTED THAT SUCH A FLUID HAS BEEN PLACED IN THE TANK, DO NOT OPERATE THE SYSTEM, CONTACT AS&T Ltd. FOR FURTHER INSTRUCTIONS.

6. DEFINITIONS OF LOCATIONS REFERRED TO IN THIS MANUAL

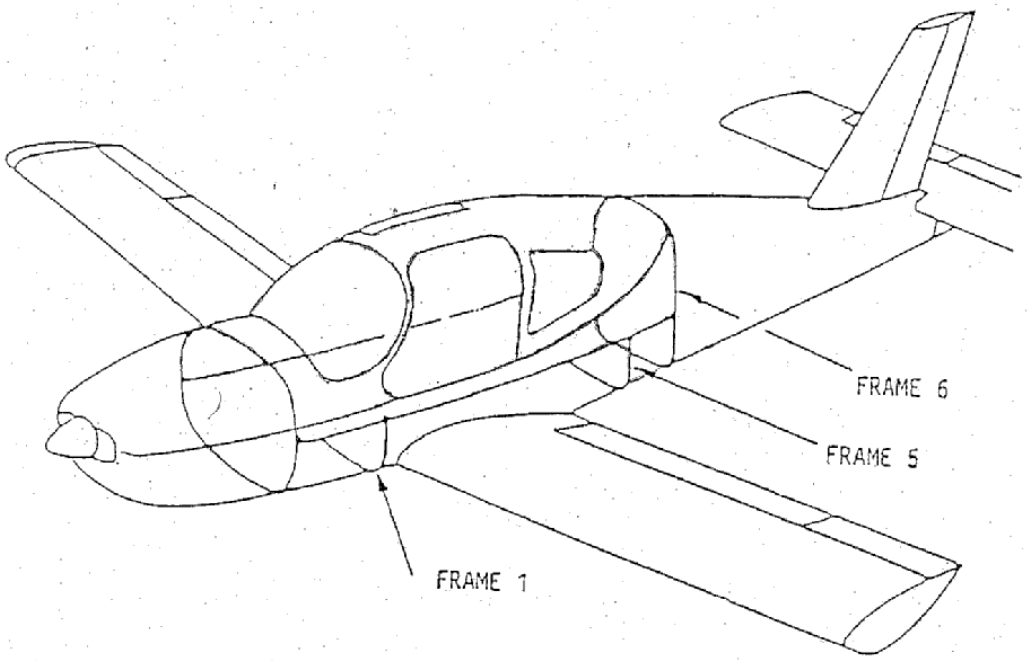

Figure 1.1
Definition of Locations TB20/21 & TB20/21GT

SECTION 2
PREPARATION OF THE AIRFRAME

1. **GENERAL**

NOTE: All items are to be removed, and reinstalled on completion of the TKS installation, in accordance with the instructions given in the appropriate section of the SOCATA Maintenance Manual for TB20/21 & TB20/21GT.

A. Remove the following exterior items:

(1) Upper and lower engine cowlings.

(2) Both inspection panels forward of base of windshield.

(3) Underbelly panels forward and aft of the landing gear wheel wells.

(4) Tailcone fairing.

B. Remove the spinner and the propeller. Note that this operation may be omitted if propeller de-icing (SOCATA Option No 522) is already installed.

C. Remove the stabilator (Reference TB20/21 & TB20/21GT Maintenance Manual Volume 1. Section V.1.3.).

D. Remove the following interior items:

(1) The front seats.

(2) Carpet - Cabin floor R.H. side.

(3) Carpet - Baggage Compartment Floor.

(4) Access Panel to Tailcone - Frame 6.

E. Place protective coverings over interior carpets and trim.

F. Remove the lower right instrument trim panel, the transponder and the transponder rack.

2. **Mark locations and drill holes in airframe to accept porous panels.**

(Reference Drawing No. 4700-90, Sheet 1.)
Prepare holes for fluid connections and air bleed valves of porous panels as follows:-

CAUTIONS:

1. ENSURE THAT PANELS ARE PROPERLY IDENTIFIED AND USED IN THE PROPER LOCATION AS THE FEED AND AIR BLEED HOLES ARE DRILLED.

2. DO NOT FASTEN THE PANELS AT THIS STAGE.
See Section 11 for Panel Installation.

1. **Main-wings**

Locate template T7135TT at three or four positions along the span where the porous panels will be fitted (reference Drawing No. 4700-90, sheet 1) and mark the upper panel edge and the axis of the inlet and air bleed valve. Join the marked points by a "chalk line".

Mark the span-wise positions at which holes are required by holding the panels against the aerofoil in their correct locations along the span of the leading edges.

Check the dimensions from the upper edge to the center of the inlet and to the center of the air bleed valve on the actual panels, which are to be fitted. If there are any significant differences between these dimensions and the distance between the two chalk lines, make local corrections to the position for the centers marked on the aerofoil.

Drill 3/4 inch [19mm] diameter holes to accept the connectors and valves on the rear of each panel. Dress the edge of each hole as required.

2. **Stabilator.**

Locate template T7056TT at positions about 5 cm from the root and tip ends of the stabilator leading edge. Mark the upper panel edge and the axis of the inlet and air bleed valve. Note that the panels are displaced upward relative to the leading edge. Join the marked points by a "chalk line".

Mark the span-wise positions at which holes are required by holding the panels against the aerofoil in their correct span-wise locations.

Check the dimensions from the upper edge to the center of the inlet and to the center of the air bleed valve on the actual panels, which are to be fitted. If there are any significant differences from the distance between the two chalk lines, make local corrections to the position for the centers marked on the aerofoil.

Drill 3/4 inch [19mm] diameter holes to accept the connectors and valves on the rear of each panel. Dress the edge of each hole as required.

3. **Vertical Stabilizer.**

NOTE: TB20/21 has 2 panels, TB20/21GT has 1 panel

Mark a "chalk line" along the apex of the leading edge. Mark the span-wise positions at which holes are required along this line by holding the panel/s against the aerofoil in their correct span-wise locations.

Drill 3/4 inch [19mm] diameter hole/s to accept the connector/s and valve/s on the rear of the panel/s. Dress the edge of the holes as required.

SECTION 3
INSTALLATION OF FLUID TANK IN BAGGAGE COMPARTMENT FLOOR

1. Reference:

   (1) Drawing No. 4700-90 Sheets 8 and 9.
   (2) Parts list 4700-PL
   (3) Section 1, Figure 1.1.

2. **INSTALL REINFORCEMENT STRUCTURE IN BAGGAGE COMPARTMENT FLOOR.**

   A. With reference to Drawing No. 4700-90, Sheet 8, remove the two baggage tie-downs that are to be repositioned.

   B. Place template T7044TT (162) on the left side of the baggage compartment floor with the rear edge of the template against the aft bulkhead of the baggage compartment (frame6) and the outer edge against the fuselage skin just below the compartment door opening.

   Mark the aperture to be cut in the floor panel to accommodate the tank.

   The "omega" section stiffener which is attached to the lower side of the floor panel will be removed with the panel. To permit this, drill out any rivets securing the ends of the stiffener to parts of the floor structure which will not be removed.

   Cut out the aperture in the baggage compartment floor, smooth and de-burr the edges.

   C. Using the same template, mark and drill 5,0 mm diameter at the 37 locations marked "B".

   D. Secure Beam (82) temporarily in position below the floor, along the edge of the cut-out closest to the center of the aircraft, using three (minimum) 10-32 UNF bolts through the holes drilled at C above.
   Secure beam (81) in a similar manner along the edge of the cutout closest to the door.
   Secure nut plate (88) in a similar manner along the forward edge of the cutout.
   Secure nut plate (89) in a similar manner along the aft edge of the cutout.

   E. Drill 1/8 in. [3,2mm] diameter through the floor and the attached reinforcement items at the locations marked "R" on the Template.
   Remove beams and doublers, de-burr holes. Replace beams and doublers and secure them to the floor using rivets (134).

   F. Attach brackets (83 [qty 2] 86 and 87) to the forward and aft ends of the beams as shown on drawing no 4700-90 Sheet 9 using quantity three rivets (133) at each attachment (i.e. six per angle).

   G. Attach the brackets (92) and (84) to the beams and frames at frames 5 and 6 respectively using three rivets (133) at each attachment (i.e. two to attach the bracket to the beam and one to the frame). Install the two-reinforcement plate's (93) as shown on drawing 4700-90 sheet 8 using rivets (133). Reinstall the two baggage tie-downs at the new locations using rivets (136).

   H. By reference to Drawing No. 4700-90 sheets 8 and 9 and using closing plate (42) as a template, mark and cutout an access hole in the lower fuselage skin aft of frame no 5.
   Smooth and de-burr the edges of the cutout and check that the closing plate is a close fit in the aperture.

I. Temporarily attach the access panel to reinforcement plate (43) as a means of locating the reinforcement plate relative to the aperture. Match drill the reinforcement plate and skin 1/8 in. [3,2mm] diameter using the pilot holes in the reinforcement plate. Remove reinforcement plate and de-burr holes.

Replace reinforcement plate and secure to skin using quantity 16 rivets (146).

J. By reference to Drawing No. 4700-90 sheet 15 and using template (23) mark and cutout an aperture in the left fuselage skin aft of frame no 6 for the tank filler.
Smooth and de-burr the edges of the cutout and check that the filler door (24) fits within the aperture with a clearance of 0.01in. to 0.05in. [0,25mm to 1,27mm] around the periphery, except along the lower edge where a gap is provided for the hinge.

K. Reference Drawing No. 4700-90 Sheet 15.
Temporarily attach the filler door (24), gutter (27) and guide (26) to the doubler assembly, and position the whole unit on the skin with the filler door located centrally in the aperture. Match drill the doubler assembly, gutter and guide and skin 1/8 in. [3,2mm] e locations of the piloted holes in the doubler. Remove filler parts, countersink the holes to match the rivets on the skin outer surface, de-burr holes.
Replace filler parts and secure doubler assy. (25) gutter (27) and guide (26) to skin using quantity 2 rivets (128) and 35 rivets (127).

Notes:

1. It is necessary to install the rivets in the center of the lower edge of the doubler assembly before fitting the tube guide. The tube guide is then secured using rivets through the skin and doubler on either side.

2. The mating faces between the Gutter and Doubler are to be coated with sealant (150) before assembly.

L. Secure Filler Door Assembly (24) to Doubler Assembly using qty.3 screws (Part number AN526-832-R6) supplied with Doubler Assembly. Check that the data plate (178) has been attached to the side panel of the filler.

M. Carefully peel back the insulation on the aft side of Frame 6 in the vicinity of the Fluid Tank Filler Neck. Cut a hole 1 1/4 in. [32mm] diameter in the aft bulkhead of the baggage compartment (frame 6) at the location shown on drawing no 4700-90 sheet 15, de-burr and smooth edges. Install channel (19) as shown on the referenced drawing using angles (20 and 21) to attach to the rear of frame 6 and bracket (22) to support the rear end of the channel below the filler assembly. Rivet the angles and brackets to the upper edges of the channel using rivets (133) with the heads on the inside of the channel. Attach the angles to frame 6 using two rivets (133) and attach the support bracket to the rear (triangular) face of the gutter using two rivets (133).
Fit grommet strip (115) around the edges of the hole in frame 6.

N. Paint filler door, access panel and their surrounding areas to match aircraft colour scheme. Affix Placard (145) to outside of filler door as defined on Drawing No. 4700-90 Sheet 14.

CAUTION:
ENSURE THAT THE PLACARD DOES NOT OBSTRUCT THE DRAIN HOLES

Install strips of self-adhesive PTFE Tape (149) along both sides of the anti-spin strake riveting, as shown on Drawing No. 4700-90 Sheet 9

O. Note: The following instructions assume that the wiring harness has been installed as detailed in Section 7 and that the pipelines have been installed as detailed in Section 5. The installation of both of these items must have been completed before the tank is installed.

CAUTION:

THE TANK COVER PANEL FORMS PART OF THE PRIMARY AIRCRAFT STRUCTURE. UNDER NO CIRCUMSTANCES IS THE AIRCRAFT TO BE FLOWN WITH THIS PANEL OMITTED OR PARTIALLY SECURED.THE TANK FLANGES ARE PROVIDED WITH SPACER STRIPS ALONG THE LONGITUDINAL AND AFT EDGES OF THE TANK TO ACCOMMODATE THE STEP IN FLOOR THICKNESS WHEN THE 28 VOLT BATTERY IS FITTED. THESE SPACERS ARE TO BE REMOVED IF FITTING THE TANK TO AN AIRCRAFT WITH A 14-VOLT BATTERY.

Install the tank through the aperture in the baggage compartment floor. Check that the tank flange seats evenly on the floor and that the rivets installed in the floor at E above coincide with the holes provided in the tank flange to accept the rivet heads. Place the cover panel over the tank and secure with countersunk head screws (135).

P. Connect the wiring harness to the tank contents transmitter by mating the three-pin in-line connector. Connect the 1/2-inch diameter feed line to the tank outlet using the procedures detailed in section 5.

Q. Using sealant (150) on the interface surfaces, connect the 1 inch diameter convoluted tube (48) to the stub tube below the filler cap and secure with hose clamp (49). Thread the free end of the tube forward through frame 6, locating the tube in the support channel so that sufficient free tube will be available to permit opening and closing of the filler access panel when the tube is eventually restrained in the channel.
Cut the tube to length as required to fit over the stub tube fitted on the tank. Using sealant (150) on the interface surfaces, connect the tube to the tank stub tube and secure with hose clamp (49). Secure the tube in the channel with cable ties (143) passed around the channel and through the holes in the upper edge of the channel. Do not over-tighten. Check that the tube does not impede full movement of the door.

R. Position Tank Inlet Guard (32) over Tank filler neck as shown on reference Drawing No. 4700-90 Sheet 15. Drill 5.2mm diameter through flange on Guard and Frame 6 in four places, taking care to avoid any existing holes or obstacles. Secure guard to frame using bolt (119), nut (118) and qty. two washers (120) at each of the four locations. Replace insulation, trimming where necessary.

SECTION 4

1. **INSTALLATION OF EQUIPMENT PACK BELOW CABIN FLOOR**

References:

(1) Drawing No. 4700-90 Sheets 4 and 11.
(2) Parts list 4700-PL
(3) Section 1, Figure 1.1.

2. The Equipment Pack is mounted on the aft face of Frame 1 as shown on Drawing No. 4700-90, Sheets 4 and 11.

Installation is accomplished as follows:

A. Place template T1010DJ on the right side of frame 1 as shown on Drawing No. 4700-92 sheet 11. Drill six 5.1mm diameter holes at the locations indicated. Attach captive nuts (121) to forward face of frame using qty. 2 rivets (126) at each location.

B. Bolt bracket (34) to the equipment pack (18A), (18B), (18C), or (18D). Temporarily bolt the equipment pack in position on the aft surface of frame 1. Mark the location of bracket (34) on the underside of the cabin floor. Remove the equipment pack and detach the bracket. Relocate the bracket at the marked location on the underside of the floor and match drill the piloted holes 1/8 in.

C. [3,2mm] diameter ensuring that the drill has adequate clearance from equipment on the upper surface of the floor. Secure the bracket in place using qty. twelve rivets (133).
Note that the rivets are inserted from underneath in the region of the pedestal and from above where access to the floor permits.

D. Secure Equipment Pack in position on Frame 1 using qty. six bolts (113). Secure Pack to bracket (34) using qty. two screws (139).

SECTION 5
INSTALLATION OF PROPORTIONING UNITS AND PIPELINES.

1. **INSTALL PROPORTIONING UNITS**.

A. The proportioning units P/N PU300GW52 (28) or PU300GW118 (29) (for 3-blade) (28) which supply the mainplanes and propeller are to be mounted to a bracket (90) which is to be secured to the diaphragm between the main landing gear wheel wells, using screws (122), washers (120) and nuts (118) in four places as shown on Drawing Number 4700-90 Sheet 16. The plate is to be positioned on the forward side of the diaphragm, with the captive nuts forward, centrally over the left lightening hole of the diaphragm. Fasten proportioning unit to bracket with two bolts (112) with washers (120) beneath the heads and spacers (91) between the proportioning unit and the mounting plate.

B. Position the Tail Bracket Assembly (30), or (31) (for TB20/21GT model), as defined on Drawing No. 4700-90 Sheet 7. Drill qty. two holes 5.2mm. diameter in the vertical stiffener attached to Frame 9 and qty. one hole 5.2mm. diameter in the frame to match the holes in the bracket. Attach captive Nut (121) to the forward face of the frame at the hole location using two rivets (126). Secure bracket to the frame using bolt (119) with washer (120) and to the stiffener using bolt (119) with washer (120) at each location. Connect the earth lead to the existing earth point on frame 9. Note that the pressure switch cables are sealed to the switches and to the waterproof connectors. No attempt must be made to disassemble these sealed joints.

2. **INSTALL PIPELINES AND CONNECTIONS**

CAUTION:
NYLON PIPELINE CONNECTIONS ARE NOT TO BE SUBJECTED TO TENSION

A. Ensure that the pipeline is not under strain on installation and cut to lengths such that a minimum of 3% (1 inch per 3 feet) [30mm per metre] is allowed for tensioning effects such as thermal shrinkage and airframe flexure.

Assemble Nylon pipeline couplings according to TKS Manual 30-09-46

B. Plastic pipelines are used throughout, except in the engine compartment forward of the firewall where stainless steel pipes and fire resistant hose are used.

Five types/sizes of pipelines are used:
3/16 inch O.D. Nylon.
5/16 inch O.D. Nylon.
1/2 inch O.D. Nylon.
3/16 inch O.D. Stainless Steel.
1 inch I.D. Convoluted.

Route the pipelines through the aeroplane as detailed in section F. The pipelines are to be routed using grommets, cable ties and cushioned clamps (108) and (109) and secured to prevent chafing or wear. Use the general procedures and techniques of AC-43.13-1A and AC-43.13-2A (or equivalent national specifications). The type of tubing to be used is indicated in Drawing No. 4500-90 Sheet 2.

C. Assemble couplings in accordance with TKS Manual 30-09-46 using the items detailed in the list below. Do not use dissimilar metals within a coupling except where specifically detailed. Clench tools are to be used when making connections using stainless steel. Their use with aluminum alloy olives is optional but recommended.

D. Connect the 5/16 in. pipelines to the proportioning units, PU300GW52 and PU300DT51, (PU300CT105 for TB20/21GT Model) and to the pumps, manifold, filter, spray-bars and tank connections as shown in Drawing 4700-90 Sheet 2.

E. Connect the 3/16-in. pipelines to the proportioning unit outlets and route them to the location of the various panels. The proportioning unit outlets are shown in Table 5-1.NOTE: Do not connect pipelines to the respective panels at this time. The system must be pressure tested first.

TABLE 5-1
Connection of Proportioning Unit Outlets

LOCATION	PART No.	OUTLET No.	ROUTE TO PANEL Part No	Location
Between Main Gear Wheel Bays	PU300GW52 or PU300GW118	1	D4701T	(Left Wing Outboard Panel)
		2	D4704T	(Right Wing Center Panel)
		3	D4706T	(Right Wing Inner Panel)
		4	D4705T	(Left Wing Inner Panel)
		5	D4703T	(Left Wing Center Panel)
		6	D4702T	(Right Wing Outer Panel)
		7	Propeller	

LOCATION	PART No.	OUTLET No.	ROUTE TO PANEL Part No	Location
Tailcone	PU300DT51 (TB20/21)	1	D4712T	(Right Stabilator)
		2	D4711T	(Left Stabilator)
		3	Not Used	
		4	Not Used	
		5	Not Used	
		6	D4723T	(Upper Vertical Stabiliser)
		7	D4721T	(Lower Vertical Stabiliser)
Tailcone	PU300DT105 (TB20/21GT)	1	D4712T	(Right Stabilator)
		2	D4711T	(Left Stabilator)
		3	Not Used	
		4	Not Used	
		5	Not Used	
		6	D4725T	(Upper Vertical Stabiliser)
		7	Not Used	

TABLE 5-2
Couplings

Item A	Tube Size:	5/16	
	Coupling Material:	Light Alloy	
	Nut Part Number:	MN4855	Item 44
	Olive Part Number:	MN101-20	Item 51
	Seal Part Number:	S1201-20	Item 55
	Clenching Tool:	T300-120A	
Item B	Tube Size:	1/2	
	Coupling Material:	Light Alloy	
	Nut Part Number:	MN6201	Item 47
	Olive Part Number:	MN101-32	Item 53
	Seal Part Number:	100-013-8810	Item 57
	Clenching Tool:	T300-144	
Item C	Tube Size:	3/16	
	Coupling Material:	Light Alloy	
	Nut Part Number:	MN4856	Item 45
	Olive Part Number:	MN101-12	Item 50
	Seal Part Number:	S1201-12	Item 54
	Clenching Tool:	T300-112A	
Item D	Tube Size:	3/16	
	Coupling Material:	Stainless Steel	
	Tube Material	Nylon	
	Nut Part Number:	ZN4856	Item 60
	Olive Part Number:	ZN101-12	Item 58
	Seal Part Number:	S1201-12	Item 54
	Clenching Tool:	T300-112A	
Item E	Tube Size:	3/16	
	Coupling Material:	Stainless Steel	
	Tube Material	Stainless Steel	
	Nut Part Number:	ZN4856	Item 60
	Olive Part Number:	ZN101-12	Item 58
	Seal Part Number:	None Used	
	Clenching Tool:	T300-112A	
Item F	Tube Size:	5/16	
	Coupling Material:	Stainless Steel	
	Tube Material	Nylon	
	Nut Part Number:	ZN4855	
	Olive Part Number:	ZN101-20	
	Seal Part Number:	S1201-20	
	Clenching Tool:	T300-120A	

Notes relating to Table 5-2:

1 Item designation (A, B, etc.) refers to the call out on Drawing No. 4700-90 Sheet 2.

2 The Item Number following the part Number refers to the call out on Parts List 4700-PL Pipe-line Routing. (Ref Drawing No. 4700-90 Sheet 4)

(1) **Feed from Tank to Equipment Pack. (1/2 inch o.d.)**
Route tube from tank outlet to right side of fuselage, passing it below control push rods. Then route forward through R.H. side lightening holes in frames 5 and 4 below forward end of baggage compartment floor. Continue routing forward, passing through right lightening

hole in diaphragm between main gear wheel bays (frame 3), and below main spar to connection at drain point on equipment pack. Secure tube below control rods using 'P' clips attached to the frame.

Check that tube does not foul control rods.

(2) **Feed tube from Equipment Pack to Proportioning Units. (5/16 inch o.d.)**
Fit Grommets (104) into 26mm holes in wing spar.
Route tube aft from equipment pack, via hole in L.H. spar as far as proportioning unit between wheel bays. Install tee (item 41) at a position 8 in. to 10 in. [200mm to 250mm] forward of Frame 3. Connect one outlet of tee to proportioning unit located on Frame 3. Route tube aft, towards left side of fuselage following existing cables to left of battery, below baggage compartment floor and along aft fuselage as far as frame 8. At frame 8 route tube to right side of fuselage then continue aft along skin joint to exit through frame 9 and connect to proportioning unit.
Attach tube with cable ties to 1/2-inch tube and to existing cables in fuselage at approximately 12 in. [30 cm] intervals. Secure at 2 existing rivet locations on stiffener between frames 8 and 9 and at two suitable locations along Frame 8, using cushioned clamp (109) fastened with rivet (133).

Tubes from Wing Proportioning Unit to Wing Panels and Propeller.

(A) **Supply to Inner Wing Panels**
Route tubes from outlets 3 and 4 forward through lightening hole to right of proportioning unit and holes in spar, then outboard to right and left wing roots respectively. Route into wing through existing hole, following path of fuel line to bay in which panel connection is situated.

(B) **Supply to Propeller.**
Route tubes from outlet 7 forward through lightening hole to right of proportioning unit then outboard to right wing root following route of tube from outlet no. 3. Continue forward along right side of fuselage, securing with cushioned clamps (109) where necessary. Drill three holes and insert grommets as shown on Drawing No. 4700-90 Sheet 5. Route tube up through cabin floor as detailed on Drawing No. 4700-90 Sheets 4 and 5. Continue up and forward behind cabin right side trim panel then route along rear of firewall to bulkhead

coupling (67) [refer to Drawing No. 4700-90 Sheet 10A for coupling location]. Continue forward through engine bay as shown on Drawing No. 4700-90 Sheets 10A and 6.

(C) **Supply to Mid and Outer Wing Panels**
Route tubes from outlets 2 and 6 aft and outboard to right wing, and tubes from outlets 1 and 5 aft and outboard to left wing following path of existing cables around wheel bays and along wing roots to rear spar. Follow route of existing cables outboard along upper edge of rear spar, and into wing through existing hole near outboard end of flaps. Then route through lightening holes in main spar and ribs to panel connector locations.

CAUTION: CHECK THAT NYLON TUBES AND EXISTING WIRING DO NOT FOUL FLAPS OR PROJECT INTO AIRSTREAM THROUGH FLAP SLOT.

Attach with cable ties and clips as necessary in fuselage region and with cable ties to existing cables at 30 cm maximum spacing along rear spar.

(4) **Tubes from Empennage Proportioning Unit.**

(A) Supply to Vertical Stabilizer.

Route tubes from outlets 6 and 7 (outlet 6 only for TB20/21GT Model) forward following route of 5/16-inch tube to frame 8, then through existing grommets in frame 8. Continue upwards through L.H grommet in top of fuselage into forward region of tail fin following route of existing electrical cable.

Supply to Stabilator.

Note:1. This work must be carried out after pressure testing of system (ref. Section 12) and installation of Stabilator panels (ref. Section 6).

(B). For installation of tubes in stabilator see Section 6.
Re-install and re-rig the stabilator in accordance with the SOCATA maintenance manual.

Secure tube from L.H. stabilator panel to fuselage frame 9 using cushioned clamp (108), bolt (119), nut (118) and washer (120) located as shown on Drawing No. 4700-90 sheet 7. With the stabilator leading edge in the fully down position gently pull the tube tight through the cushioned clamp, then pull back 2 in. [50 mm] from this position to provide slack to permit stabilator movement. The tube from the R.H. stabilator panel does not require a clamp. Check that at both extremes of stabilator movement there is at least 4 in. [100 mm] of sideways movement available in both tubes. Connect the tubes to proportioning unit outlet nos. 1 (right side supply) and 2 (left side supply).

(5) **Supply to Windshield Spray-bars.**

A. Route 3/16" tubing from outlet of Windscreen Wash Pump (item 18C on Equipment Pack) upward through grommet (114) in the cabin floor as detailed on Drawing No. 4700-90 Sheets 4 and 5. Secure with cable ties where necessary. Continue upwards and forwards behind cabin R.H. trim panel then across bulkhead to L.H. spray-bar connection.

B. Install tee (65) at a convenient location and route 3/16" tubing from this Tee to the R.H. Spray-bar connector. See Section 7 for installation.

SECTION 6
INSTALLATION OF EQUIPMENT IN STABILATOR.

1. Drill one hole 1/4-inch [6,3-mm] diameter in each root rib, just forward of the spar at the location defined on Drawing No. 4700-90 sheet 7. Insert a grommet (107) into each hole.

2. Remove both of the upper bolts and the inboard lower bolt securing each hinge to the spar.

3 Thread a 40 in. [100 cm] length [this length will be trimmed on assembly -see Supply to Stabilator instructions - Section 5, 2.F.(4)(B)] of 3/16 inch diameter nylon tube through the hole drilled in the leading edge (Ref Section 2, 2) then through the grommet, leaving 3 in. [8 cm] projecting from the leading edge.

CAUTION: CHECK, BY MEASURING HOLE DEPTH WITH GUIDE PLATE IN POSITION, THAT HE ORIGINAL STABILATOR BOLTS ARE SUFFICIENTLY LONG TO BE IN SAFETY WITH THE GUIDE PLATES FITTED. USE NEW LONGER BOLTS IF NECESSARY.

Pass the tube through the hole in guide brackets (101) [left] and (102) [right], position the tube in the slot above the hinge, and secure the guide brackets to the stabilator hinges using the original bolts, or longer new bolts if necessary.

4. Press tube into slot between blocks on guide plate and secure in position with clamp plate (103) secured with screws (123).

5. Connect tubes to panel inlets and install panels as detailed in Section 11, 2.

6. Rebalance the stabilator by removing lead from the balance weight as detailed in the SOCATA Maintenance Manual Section IV.1.

CAUTION: THE STABILATOR MUST BE BALANCED SUCH THAT IT IS WITHIN THE LIMITS PERMITTED BY SOCATA WITH THE POROUS PANELS BOTH DRY AND FILLED WITH FLUID.

Stabilator rebalancing will entail the removal of approximately 1-kilogram from the balance weight. During balancing, allowance is to be made for the weight of de-icing fluid in the porous panels.

Note: The convention for moments in the following paragraph is the same as that in the SOCATA Maintenance Manual. i.e. Stabilator leading edge up is positive.
The de-icing fluid contained in the stabilator panels represents a moment of -50 mm kg. The stabilator is to be balanced such that the moment is within the permitted limits with the porous panels both dry and filled with fluid.
If there is any difficulty in determining the quantity of fluid contained within the panels during the balancing operation, it is recommended that the stabilator is balanced within moments reduced by 50-mm kg at each limit.

i.e. SOCATA limits are -150 mm kg to +74 mm kg. It is recommended that the stabilator with TKS panels installed is balanced within the limits -100 mm kg to +24 mm kg

SECTION 7
INSTALLATION OF WINDSHIELD SPRAY-BARS

(Reference Drawing No. 4700-90 Sheet 5.)

1. **Description**

Windshield ice protection is provided by spray-bars positioned across the base of both windshields. The spray-bars are located behind shields, which serve to prevent ice from accreting on and around the spray-bars. Fasteners attach the spray-bars to the fuselage skin; these fasteners pass through the shield at three locations. The fluid supply to the spray-bar passes through the outboard attachment, which is larger in diameter.

Install Windshield Spray-bars

A. Locate, and mark temporarily, the center of the windshield base.

B. Peel back the insulation on the inside of the fuselage skin sufficient to permit drilling of the attachment holes. Protect the adhesive face of the insulation to prevent swarf adhesion.

C. Using the dimensions shown on the referenced drawing, drill the attachment hole closest to the aircraft center line 5,2mm dia. Use the spray-bar shield as a template and drill the second 5,2mm dia hole and the 10,0mm dia hole, such that the shield is parallel to the base of the windshield. De-burr holes.

D. Assemble bolts (119) into the support (100) and thread the supports over the spray-bar. Assemble the spray-bar and supports to the shield and fit gasket (98) over the threads protruding on the lower side.

E. Apply sealant (150) (or RTV Silicone Sealant) to the threads and to the outer surface of the fuselage skin around each of the drilled holes.
Assemble the spray-bar to the skin and secure with two nuts (118) and washers (120) and nut (62) and washer (116). Clean off any excess sealant. Cut hole in insulation to accept spray-bar feed and replace insulation on inside of skin

F. Check that the supports do not obstruct any of the holes in the spray-bar. Correct if necessary by bending tabs of supports sideways as appropriate.

G. Connect the 3/16 nylon tube to the spray-bar in accordance with the procedures detailed in Section 5.
The spray-bar plumbing can be completely connected since it will not be pressure tested as will the rest of the

SECTION 8
INSTALLATION OF SYSTEM CONTROLS, WIRING AND ICE INSPECTION LIGHT

NOTE: Ensure that the equipment fitted is of the correct voltage for the aircraft. Electrical components in TKS kits, which are sensitive to supply voltage, have a suffix of -14 or -28 appended to the part number.

The control panel is not voltage sensitive, but observe note on wiring diagram Drawing Number 4700-90 Sheet 3.

1. Install circuit breaker (132) (7.5 Amp for 14-volt system or 5 Amp for 28-volt system) at the location marked "De-ice" on the circuit breaker panel.

2. Install the control panel (38) below the Transponder. In order to accomplish this it will be necessary to remove the transponder and its rear support bracket and to reinstall the transponder at the top of the cut-out in the instrument panel, using new support bracketcomponents (items 35,36 and 37 Drawing No.4700-90 Sheet 3). The transponder trim panel is to be modified as detailed on drawing no. 4767 and refitted inverted.

   [Refer also to Drawing Nos. 4767 and 4795-90.]

3. Connect wiring harness as shown in TKS Drawing No. 4500-90 Sheet 3.Note alternative routing for cables above wing spar to facilitate wing removal (Sheet 4).

   The knife disconnect (C7) in wire E0004 is located in the fuselage aft of Frame 6. Place sleeving (131) over the knife disconnect, tying both ends tightly with lacing cord.

   Note that from Kit Revision 7 waterproof connectors are used for the pressure switches on the Tail Bracket Assembly (30). They are sealed to their respective cables and at no attempt must be made to remove them. Care must be taken to avoid damaging or displacing the rubber shrouds on the connectors and pressure switches, and the connectors must be secured only in the mounting clips provided

4. **Install Ice Inspection Light**

   A. Position the ice light assembly (105) on forward face of firewall as defined on referenced drawing. Match drill four holes 5.2mm. dia. in firewall through those in bracket. Secure using bolts (119), nuts (137) and washers (120) in four places. Secure earth-bonding lead under a washer as indicated on Drawing No. 4700-90 sheet 10A. Insert lamp (106).

   B. Cut one 2 1/8-in. [54 mm] dia hole in left hand side engine cowling to align with ice inspection light glass. Smooth edges of hole and paint as required to match surrounding area.

   D. The Ice Inspection lamp is adjusted by means of a slotted hole for horizontal movement and by rotating the lamp holder for vertical movement. Adjust so that center of beam is at 50% span

SECTION 9
INSTALLATION OF PROPELLER ICE PROTECTION

ASSEMBLY INSTRUCTIONS

NOTE: The following instructions are only applicable to aircraft fitted with two bladed propeller that does not have TKS propeller protection already fitted.

a) In the case of aircraft which have TKS propeller ice protection already fitted (SOCATA Optional Equipment No.522) the required equipment will exist and the instructions given in this Section are to be ignored. In this case the existing propeller ice protection control panel, tank and pump should be removed as detailed on Drawing No. 4700-90 sheet 10B.

b) Aircraft fitted with Hartzell three bladed propeller part number HC-C3YR-1RF/F7693F(B) must also have Hartzell anti-icing kit C-4686 fitted. Refer to Hartzell drawings C-4695 and Hartzell instruction TB20-NST for the installation of this kit. AS&T/TKS drawing number 4700-90 sheet 6B shows fluid feed to this kit.

(Reference Drawing No. 4700-90 Sheet 6A)

1. Drill 2 holes 6.3mm dia. in spinner backplate at locations shown on drawing, and insert spigot of flanged connector (73). With connector (73) at correct orientation, drill 4 holes (2 at each location) 3.2mm dia, through spinner back-plate, using 2 inner holes in flange as guides. Secure connector to back-plate using rivets (148). Note that rivets (151) are not inserted at this stage. All rivets and spigots are to be assembled using a small quantity of sealant (150)

2. Mark rear surface of spinner back-plate with concentric circle at slinger ring outside diameter.

3 Locate slinger ring as shown. Drill a 1/8-inch [3,2-mm] diameter hole through slinger ring and spinner back-plate at each pilot hole, total 12 holes.

4. Secure Slinger Ring to Spinner Back-plate with qty. 12 rivets (147) using a small quantity of sealant (150) at each rivet location.

5. Drill through Spinner Back-plate and Slinger Ring using remaining hole in flanged connector (73) as a guide and secure using rivets (151), qty. 2 in total, using a small quantity of sealant (150).

6. Install nozzle tube assembly (76) and supporting 'P ' clip (80) as shown on drawing.

7. Fasten Overshoes on propeller blades.

   A. Clean and degrease propeller blades with a suitable solvent.

   B. Trim Overshoe (70) to Drawing No. 4765.

   C. Coat propeller blade and back of overshoe with 1300L adhesive. Allow to dry until no longer tacky. When no longer tacky, re-coat blade and overshoe with adhesive and place Overshoe centered on blade leading edge with inner end located 1 1/4 in. [32 mm] from hub as shown on Drawing No. 4700-90 sheet 6.

   D. Apply pressure using masking tape or equivalent and allow to cure for at least 36 hours. Remove paper tape and excess adhesive.

   Adjust outlets of Tubes (76) so they are over second groove in Overshoes (70) with propeller in fully fine pitch.

SECTION 10
PRESSURE TESTING OF SYSTEM

1. Temporarily remove propeller nozzle (72) and install a 0 - 150 lbf/sq.in. (0-10 bar) Pressure Gauge on bulkhead fitting (63).

2. Fill the Fluid Tank progressively with measured quantities of approved fluid, checking calibration of contents indicator.

3. Open the tank drain until clear fluid issues. Close the drain.

4. Remove the air bleed screw from the filter and operate the Airframe Pump in 'De-ice' mode until clear fluid issues from the bleed hole. Replace the bleed screw and wire lock to the filter center bolt. Continue to operate the pump until clear fluid flows from each panel supply pipeline.

5. Cap ends of all lines from proportioning units, which will be connected to porous panels, with the exception of feed tubes to panels D4711T and D4712T. These lines are to be blanked off at the appropriate pressure switch connection.

6. Pressure test the system.

CAUTIONS:

1. **HIGH PRESSURE WILL BE DEVELOPED IN THE SYSTEM. ENSURE THAT PROPER EYE PROTECTION IS WORN BY PERSONNEL.**

2 **ON COMPLETION OF PRESSURE TESTING FLUID WILL BE TRAPPED UNDER PRESSURE IN ALL PIPELINES; THIS PRESSURE MUST BE RELEASED INDIVIDUALLY FROM EACH PANEL SUPPLY LINE. RELEASING THE PRESSURE FROM THE PROPELLER FEED WILL ONLY DEPRESSURISE THE PIPELINES BETWEEN THE PUMP AND THE PROPORTIONING UNITS**.

A. Select the TKS switch to 'De-ice' and observe the warning lights on the TKS control panel. The following sequence of events should occur: -

- Both 'Anti-ice' and 'De-ice' LED's should flash red for a short period, until 1.5 lbf/sq.in.
- [100 mbar] system pressure is reached (typically 10 seconds, but this may be longer if not all of the air has been bled from the system).
- The flashing red should then cease and the 'De-ice' LED should then show continuous green, the 'Anti-ice' LED should be off.

B. Verify system pressure. This is to stabilise between 110 lbf/sq.in. [7,5 bar] and 130 lbf/sq.in. [8,8 bar] Check system for leaks, correct if any leaks are found.

C. Switch off pump and release pressure by slackening gauge line, and then re-tighten in preparation for next test.

D. Select the TKS switch to 'Anti-ice' and observe the warning lights on the TKS control panel. The sequence of events should be the same as at A. above, but 'Anti-ice' LED is to be illuminated, with the 'De-ice' LED off, when greater than 1.5 lbf/sq.in. [100 mbar] pressure is established. When 85 lbf/sq.in. [5.8 bar] system pressure is reached the 'High Pressure Warn' LED should show continuous yellow. The 'Anti-ice' LED should remain green and the 'De-ice' LED should remain off. Verify system pressure; this is to be within the limits defined at B. above.
NOTE: Prior to Modification No 1462, the high-pressure warning LED also operates on 'De-ice'

E `Switch off pump and release pressure by slackening gauge line. Remove pressure gauge and line. Release pressure from all panel supply lines.

F. Install nozzle (72), on bulkhead fitting (63).

SECTION 11
INSTALLATION OF POROUS PANELS

General

1. Ensure that the panels are correctly identified and used in the proper location.

2. The porous panels located in the main-plane fuel tank region (item nos. 02,03,04,05 & 06) are to be secured to the aircraft structure by bonding using fuel tank sealant. These panels are also to be riveted using four rivets, located outside the region of the fuel tank, for electrical bonding purposes.

   All other panels, with the exception of panel D4701T (item 01) are to be riveted to the structure, using fuel tank sealant along the aft edges only to secure and seal the edge. Panel D4701T is secured as detailed on Drawing No. 4700-90 Sheet 17.

   CAUTION:

   POROUS PANELS CONTAIN A PLASTIC MEMBRANE, WHICH MAY BE DAMAGED BY CERTAIN SOLVENTS, PARTICULARLY METHYL ETHYL KETONE (MEK), ACETONE, LACQUER THINNER AND OTHER TYPES OF THINNERS AND SOLVENTS. MASK PANELS WHEN PAINTING AIRCRAFT OR WHEN USING SOLVENTS FOR OTHER PURPOSES IN THE PROXIMITY OF THE POROUS PANELS.

   The porous panels may be washed with soap or detergent and water using a brush or lint free cloth. Only the following solvents are permitted for use on the exterior of porous panels:

   Water (with soaps or detergents)

   Approved de-icing fluids

   Aviation gasoline

   Aviation turbine fuel

   Isopropyl alcohol

   Ethyl alcohol

   Industrial methylated spirit

   Install Panels to be bonded to structure (items 02,03,04,05 and 06)

   (Reference Drawing No. 4700-90 Sheet 17).

   A. Use template T7135TT (161) to determine and mark the upper edge of the panels on the main-planes. "Chalk Line" a straight connecting line from root to tip.

   B. Hand fit each panel to the leading edge surface to check that the upper edge of the panel can be positioned to correspond with the line drawn in step 1.A. If necessary adjust the dimension between the two aft edges of the panel so that there is a positive light contact between these edges and both skins of the aerofoils. Where protruding rivets occur at the contact line the aft edge of the porous panel is to be dressed around the rivet head.

   C. Clean and degrease the aerofoil leading edges where panels are to be attached. Use any non-alkaline grease solvent. Do not allow any of this solvent to come into contact with the

porous panels - see CAUTION. Do not touch aerofoils following cleaning; dry with warm air (50 degrees Centigrade maximum) if necessary.

D. Hold Panel in place and mark outline of top and bottom edges on aerofoil.
Mask aerofoil 0.20 in. [5 mm] behind the "chalk line".

E. Mask entire front surface of panels with non-absorbent material (such as good quality glazed paper attached on all four edges with paper masking tape). Clean and degrease rear surface of panel using iso-propyl or ethyl alcohol. Do not touch rear surface after this operation. Dry panel (with warm air not exceeding 50 degrees C if necessary)

F. Connect appropriate feed pipe to each panel.

G. Mix a suitable quantity of Sealant (150) in accordance with manufacturer's instructions. Apply sealant to feed connection on panel rear to cover exposed connector threads, nut and pipeline for at least 1/2 inch [12 mm] beyond the nut. (This is intended to provide locking and a secondary seal).

H. Apply sealant to rear surface of porous panel as shown in reference drawing.

I. Press panel firmly into position and maintain pressure for sufficient time to allow sealant to flow into place. Scrape away any surplus sealant from edges. With panels in position, secure to aerofoil skin with strips of strong adhesive tape applied in a chord-wise direction and pulled tightly. In some installations, it will also be found advantageous to insert strips of rubber or a similar suitable material along the edges of the panels as shown in the drawing to ensure that the edges are held in contact with the surface of the tape.

J. Remove tape and masking following curing (the cure time will depend upon temperature, but may be determined by retaining a sample of the sealant mix for examination.)

K. Clean sealant around perimeter of panel as necessary. A hard rubber eraser may be suitable for this purpose. If necessary, clean panels with an approved solvent - see CAUTION at the beginning of this Section

Rivet through holes prepared in Section 2 using blind rivets (110) for electrical bonding. Wet assemble the rivets with sealant (150) or a suitable jointing compound.

2. **Panels to be riveted to structure (items 07, 08, 09 and 10)**

A. Hand fit each panel to the leading edge surface to check that the panel can be positioned to correspond with the data given on Drawing No. 4700-90, Sheet 1. If necessary adjust the dimension between the two aft edges of the panel so that there is a positive light contact between these edges and both skins of the aerofoils. Where protruding rivets occur at the contact line the aft edge of the porous panel is to be dressed around the rivet head.

Note: (i) The panels on the vertical stabiliser must fit symmetrically about the leading edge.
(ii) The panels on the stabilator are displaced upwards relative to the leading edge. Use Template No.T7056TT (160) for correct location.

B. Clean and degrease aerofoil leading edges where panels are to be attached. Use a suitable non-alkaline grease solvent. Do not allow any of this solvent to come into contact with the porous panels - see CAUTION. Do not touch aerofoils following cleaning, dry with warm air (50 degrees Centigrade maximum) if necessary.

C Hold panel in place and mark outline of top and bottom edges on aerofoil. Apply tape item 149) so that the aft edge is 0.05" [1,27 mm] behind the marked line (i.e. so that 0.05" [1,27 mm] will project beyond the edges of the installed panels). Mask aerofoil behind the tape.

D. **CAUTION: IF ADHESIVE TAPE IS USED TO SECURE THE PANEL IN POSITION DO NOT APPLY THE TAPE TO THE POROUS PART OF THE PANEL.**

Temporarily secure panel into position. Match drill aircraft skin 1/8" dia. [3,2 mm] through pilot holes in panel. Remove panels and deburr holes.

E. Mask entire front surface of panels with non-absorbent material (such as good quality glazed paper attached on all four edges with paper masking tape). Clean and degrease rear surface of panel using isopropyl or ethyl alcohol. Do not touch rear surface after this operation. Dry panel (with warm air up to 50 degrees Centigrade if necessary).

F Support panels as necessary to avoid putting strain on pipelines and connect appropriate feed pipe to each panel.
Mix a suitable quantity of Sealant (150. Apply sealant to feed connection on panel rear to cover exposed connector threads, nut and pipeline for at least 1/2 inch [12 mm] beyond the nut. (This is intended to provide locking and a secondary seal).

F. Apply sealant to rear surface of edges ONLY of porous panel as shown on referenced drawing. Apply a small quantity of sealant to each of the holes drilled in the skin at D. above.

G. Press panels firmly into position, allowing sufficient time for sealant to flow. Secure panels to skin using rivets (110) except for Panel D4701T which is to be secured using screws (125). See Drawing No. 4700-90 Sheet 17 for details.

H. Remove tape and masking before the sealant cures, taking care not to smear the sealant on the skin or panels. Leave sealant to cure. (The cure time will depend upon temperature, but may be determined by retaining a sample of the sealant mix for examination.)

J. Clean sealant around perimeter of panel as necessary. A hard rubber eraser may be suitable for this purpose. If necessary, clean panels with an approved solvent - see CAUTION at the beginning of this Section1.

3. **Panel D4701T (Item 01)**

A. Proceed as in 2 A through D above.

B. Using anchor nut (captive nut) (124) as a template, drill qty two holes at each attachment point for rivets (126).

C. Secure anchor nuts (124) inside the skin using qty two rivets (126) each.

D. Proceed as in 2 E through J.

SECTION 12
INSTALLATION OF FUEL TANK VENT AND AIR INTAKE ICE SHIELDS

1. **Fuel Tank Vent Shields**.
(Refer to Drawing No. 4700-90 Sheet 12)

To determine locations of Fuel Tank Vent Ice Shields (99). Match drill for qty two rivets (129) as shown, taking care not to damage internal components.

Clean and degrease aircraft skin at the locations where the shields are to be fitted. Bond Shields in position using sealant (150), securing with rivets (129). Remove excess sealant if necessary after bonding.

2. **Cabin Heat Air Intake**.
(Reference Drawing No. 4700-90 Sheet 13).

A. Cut wire mesh from intake and dress cut edges smooth to permit insertion of tube (69). Check that tube can be inserted to at least a depth of 0.75 in. (19mm) as shown on the referenced drawing.

B. Degrease inside of intake and outside of tube and bond tube into position using polyester resin. Allow resin to cure.

C. Cut the protruding part of the tube to the profile shown on the drawing. Note that the axis of the section shown through the intake passes through the propeller hub.

D. Smooth cut edges of tube, dress off any surplus resin (both internal and external to intake). Paint to match aircraft colour scheme.

SECTION 13

CHECKING AND FINAL ASSEMBLY

1. Fill glycol tank with approved fluid and operate system in 'De-ice' mode on ground to ensure flow through each panel.

   NOTE: On initial filling it may take as much as fifteen minutes for full flow to be established on all panels.

   A. Make final check for internal leaks and correct if any present.

   B. Operate windshield spray and ensure proper operation and absence of leaks.

   E. Operate Ice Inspection Light and ensure proper operation, correct if necessary.

   C. Confirm proper annunciation on control panel, (Reference Section 10) correct any discrepancy.

2. **Install the required Placards in the appropriate language:**
   (Refer to Drawing No. 4700-90 Sheet 14.)

   A. In place of the SOCATA flight limitation placard:

   "FLIGHT CONDITIONS: DAY AND NIGHT IFR AND VFR. FLIGHT IN ICING CONDITIONS PERMITTED REFER TO FLIGHT MANUAL SUPPLEMENT" (158).

   B. Adjacent to fluid tank filler: "TKS ICE PROTECTION TANK USE ONLY THE FOLLOWING FLUIDS TKS 80; AL-5 (DTD 406B); TKS R328 (145)

   CAUTION:
   ENSURE THAT PLACARD DOES NOT OBSTRUCT DRAIN HOLES IN DOOR

   In four places as shown on drawing:-

   CAUTION:
   POROUS DE-ICING PANELS MAY BE DAMAGED BY CERTAIN SOLVENTS

3. Install bracket (172) to carry placard (171) adjacent to TKS drain, as shown on Drawing Number 4700-90 Sheet 14.

4. Include Flight Manual Supplement aircraft documents.

5. Compute new weight and balance information using data from Flight Manual Supplement
   Make entries in aircraft maintenance records.

6. Complete both copies of Registration Form. Return one copy to AS&T Ltd.