Beechcraft

BONANZA

FAA APPROVED AIRPLANE FLIGHT MANUAL

THIS MANUAL MUST BE KEPT IN THE AIRPLANE AT ALL TIMES
BEECH AIRCRAFT CORPORATION, WICHITA 1, KANSAS

CAA Identification N6097E — Airplane Serial D-6107
CAA Approved, based on CAR 3, Utility Category — Type Certificate 3A15

MODEL K35 BONANZA LANDPLANE
AIRPLANE FLIGHT MANUAL

(Observance of the limitations listed in Section I is mandatory.)

I. LIMITATIONS:

The following limitations are to be observed in the operation of this airplane equipped with Continental IO-470-C engine.

A. Engine Limits:
Take-off and maximum continuous operation (sea level): 2600 rpm, full throttle; 250 hp.

B. Fuel: 91/96 minimum octane aviation gasoline (usable capacity, two tanks 24-1/2 gallons each - 49 total). Auxiliary fuel tanks optional; usable capacity, 19 gallons.

C. Propeller (Beech Model):

Model	Hub Assembly	Blade Assembly	Pitch Setting at 33-inch Station	
278	278-100-7	278-214-82 or 278-213-82	Low - 13.5°	High - Not under 30°

D. Power Plant Instruments:
Oil Temperature: Green Arc (normal operating range) 100° to 225° F; Yellow Line (caution) 100° F; Red Line (max) 225° F.
Oil Pressure: Green Arc (normal operating range) 30 to 60 psi; Red Line (max) 80 psi, Red Line (min) 30 psi.
Fuel Pressure: Green Arc (cruise power) 4 to 17 psi (operating range); Red Line (max) 17.5 psi; Red Line (min) 1.5 psi.
Cylinder Head Temperature: Green arc (normal operating range) 200° to 460° F; Red Line (max) 460° F.
Tachometer: Green Arc (normal operating range) 1750 to 2600 rpm; Red Line (max) 2600 rpm.
Manifold Pressure: Green arc (normal operating range) 15 to 29.6 in. hg.; Red Line (maximum SL) 29.6 in. hg.

E. Airspeed Limits:

(True Indicated Air Speed)	Utility Category
Never Exceed	225 mph (195 knots) (Red Line)
Caution Range	185-225 mph (161-195 knots) (Yellow Arc)
Normal Operating Range	70-185 mph (61-161 knots) (Green Arc)
Flap Operating	59-120 mph (51.5-104 knots) (White Arc)
Maximum Design Maneuvering Speed	142 mph (123 knots)
Maximum Structural Cruising Speed	185 mph (161 knots)
Maximum Gear Extended Speed	140 mph (122 knots)

F. Maneuvers: Only the following maneuvers approved:
Chandelle - Entry Speed - 142 MPH (123 knots) TIAS
Steep Turn - Entry Speed - 142 MPH (123 knots) TIAS
Lazy Eight - Entry Speed - 142 MPH (123 knots) TIAS
Stalls (except whip) - Use Slow Deceleration
Spins are prohibited (in case of inadvertent spin, apply opposite rudder and ease column forward. Avoid abrupt pullout upon recovery).

G. Design Structural Load Factor: 4.4G No inverted maneuvers approved
NOTE: Use control with caution above 142 mph (123 knots) and with extreme caution above 185 mph (161 knots). Reduce speed to 142 mph (123 knots) or less in rough or turbulent air.

H. Maximum Weight: 2950 pounds.
Datum is 83.1 inches forward of center line through forward jack points.
MAC leading edge is 66.7 inches aft of datum; 65.3 inches long.
CG Limitations (wheels down):
Forward - 77 inches to weight of 2475 pounds with straight-line variation to 82.1 inches at 2950 pounds.
Rear - 85.7 inches to weight of 2525 pounds with straight-line variation to 84.7 inches at 2950 pounds.

I. Placards:
On Fuel Selector Valve: "(Use 10 Gal. First) LH Tank 25 gal." "RH Tank 25 gal."
NOTE: On airplanes equipped with auxilliary fuel tanks: "(Use 10 Gal. First) LH Tank 25 Gal." "Aux. Tank 20 Gal. (Use Second), Level Flight Only." "RH Tank 25 Gal."
On Inner Side of Glove Compartment Door: "Emergency Landing Gear Instructions to Extend: Engage handle in rear of front seat and turn counterclockwise as far as possible (50 turns)."
On Inner Side of Electrical Control Panel Door: "Vent Shutoff Pull in case of fire in engine compt" "To release flares 1. Actuate master circuit breaker switch. 2. Actuate selector switch to release individual flare."
On Inner Side of Baggage Compartment Door: "Baggage Compartment and/or Jump Seat. Load in Accordance with Airplane Flight Manual. Maximum Structural Capacity --- 270 Pounds." "Maximum Jump Seat Structural Capacity -- 170 Pounds."
On Storm Window: "Caution - Do not Open Above 145 mph".
On Rear Window: "Do Not Open in Flight." "Latch Window before Take-Off."
In Full View of Pilot: "Utility Category Airplane. Operate in accordance with CAA Approved Airplane Flight Manual. Intentional Spins Prohibited. No acrobatic maneuvers approved except those listed in the Airplane Flight Manual."
Above Inside Door Handle: "Caution After Closing Door Rotate Handle to Full Locked Position."
Above Landing Gear Mechanical Position Indicator When Winter Baffles are Installed: "Notice - Remove Winter Baffles When Outside Air Temperature Exceeds 70°F."

CAA Approved
Date: October 29, 1958
Part 35-590084

II. PROCEDURES:

A. NORMAL:

Cabin door latches - turn counterclockwise to lock.

Fuel System - Excess fuel from the engine is returned to the main tank from which fuel is being drawn; when operating on auxiliary tanks, fuel is returned to the left main tank. Use left main tank for first hour of flight. Drain fuel sumps daily. Use auxiliary pump on low position for starting; if fuel pressure is low, auxiliary pump may be used in emergency position for starting. Turn auxiliary pump off after start. NOTE: Auxiliary pump in emergency position with engine-driven pump operating may give over-rich mixture and slight power loss. CAUTION: When switching tanks, if fuel tank runs dry, close throttle first to prevent engine overspeed on restarting.

Wing Flap Settings - Use 0° for take-off, 30° for landing.

Circuit Breakers - Located in electrical control panel and under glove box. Push-to-reset or pull off and push-to-reset.

B. EMERGENCY:

Fuel System - Turn aux fuel pump to emergency position in case of loss of fuel pressure.

Fire - Ignition switch off. Fuel selector off. Pull smoke control handle in electrical control panel.

Emergency Landing Gear Extension - Landing gear switch down, circuit breaker off. Engage handle at rear of front seat, turn counter-clockwise as far as possible. WARNING: Keep handle strapped in disengaged position when not in use.

NOTE: Particularly at night, reflections from rotating anti-collision lights on clouds, dense haze or dust can produce optical illusions and intense vertigo. Such lights, when installed, should be turned off before entering an overcast; their use may not be advisable under any instrument or limited VFR condition.

III. PERFORMANCE:

The following performance figures were obtained during Civil Aeronautics Administration type test and may be realized under conditions indicated with the airplane and engine in good condition and with average piloting technique.

All performance is given for 2950 pounds weight, with no wind and on level, paved runways, with Continental IO-470-C engine. In using the following data, allowance for actual conditions must be made.

	Altitude Feet	Outside Air Temperature 0°F	25°F	50°F	75°F	100°F
Take-Off Distance (ft).	Sea Level	1220	1280	1320	1385	1450
Distance required to take off and climb	2000	1340	1420	1490	1570	1670
to 50 ft. flaps up, full throttle, 2600 rpm.	4000	1495	1600	1700	1795	1930
Take-off speed, 79 mph (68.6 knots) (TIAS).	6000	1720	1850	1980	2110	2280
	8000	2090	2260	2430	2600	2835
Landing Distance (ft).	Sea Level	1430	1480	1530	1580	1625
Distance required to land over 50-foot	2000	1500	1550	1605	1655	1700
obstacle and stop. Flaps full down.	4000	1570	1625	1680	1730	1780
Approach at 78 mph (67.6 knots) (TIAS).	6000	1650	1705	1760	1810	1860
	8000	1735	1790	1840	1890	1945
Normal Rate of Climb (ft/min).	Sea Level	1220	1180	1145	1110	1080
Full throttle, 2600 rpm, flaps up.	2000	1105	1065	1030	1000	965
Best rate-of-climb speed = 103 mph	4000	990	950	920	885	850
(89.5 knots) (TIAS) at Sea Level.	6000	880	840	805	770	735
Reduce one mph per 2000 ft. increase	8000	765	725	690	660	620
in altitude.						
Balked Landing Climb (ft/min).	Sea Level	805	750	700	655	605
Full throttle, 2600 rpm, flap and	2000	685	630	580	540	490
gear down. Best rate-of-climb	4000	565	510	465	420	375
speed = 80 mph (69.5 knots) (TIAS).	6000	445	395	345	305	260
Reduce one mph per 1000 ft. increase	8000	325	275	230	190	145
in altitude.						

Stalling Speeds (mph), Power Off.	Angle of Bank	0°	20°	40°	60°
	Gear and Flap DOWN	59.0 mph (51.5 knots)	60.5 mph (52.5 knots)	67.0 mph (58.0 knots)	83.0 mph (72.0 knots)
	Gear and Flap UP	70.0 mph (61.0 knots)	72.0 mph (62.5 knots)	80.0 mph (69.5 knots)	99.0 mph (86.0 knots)

Altitude lost during stall is approximately 200 feet.

CAA Approved
Date: October 29, 1958
Part 35-590084

Approved

Virgil H Adamson

Virgil H. Adamson
DMCR 5-3

As conditions warrant, the Beech Aircraft Corporation issues service bulletins and letters recommending modification and operational procedures to enable you to get the maximum utility and safety from your airplane at a minimum of cost.

These bulletins and letters are available to BEECHCRAFT owners through your BEECHCRAFT distributor at no charge at the time of original issue. Previously issued bulletins are available at a nominal fee.

As a special service to owners, these bulletins and letters are available by direct mailing from the Service Division of Beech Aircraft Corporation for a $5 per year mailing and handling charge per model.

BEECH AIRCRAFT CORPORATION

MODEL K35 BONANZA

IV. WEIGHT AND BALANCE

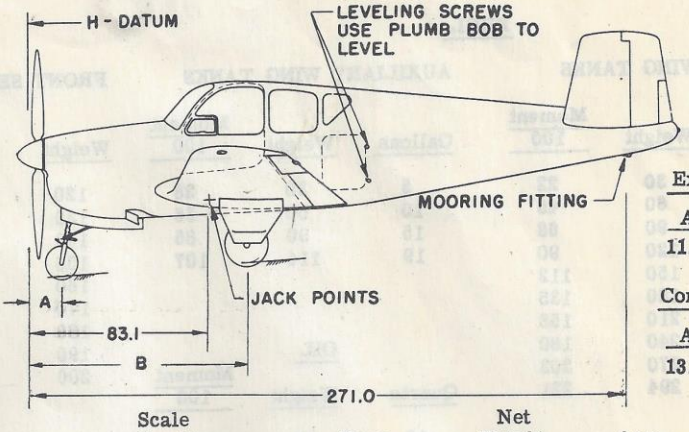

Serial D-6107

Registration N6097E

Computed by V. Snisher

Checked by VES

Date 9-2-59

Extended	
A	B
11.8	96.0

Compressed	
A	B
13.1	97.0

Actual Weight	Scale Reading	Tare	Net Weight	Arm	Moment
Main Jack Reaction	1953		1953	83.1	162294
Mooring Fitting Reaction	98	153	-55	271.0	-14905
Total as Weighed	2051		1898	77.7	147389
Remove:					
Seat Covers			-4	100	-400
Add:					
Unusable Oil			3	21	63
Unusable Fuel			6	79	474
Auxiliary Unusable Fuel			5	94	470
Air Conditioner Water			4	159	636
Empty Weight (Actual)			~~1912~~	~~77.7~~	~~148632~~
SEE FORM FAA-337 (Rev. #1) DATED 9-27-61			1924	77.7	149510.3

Superseded

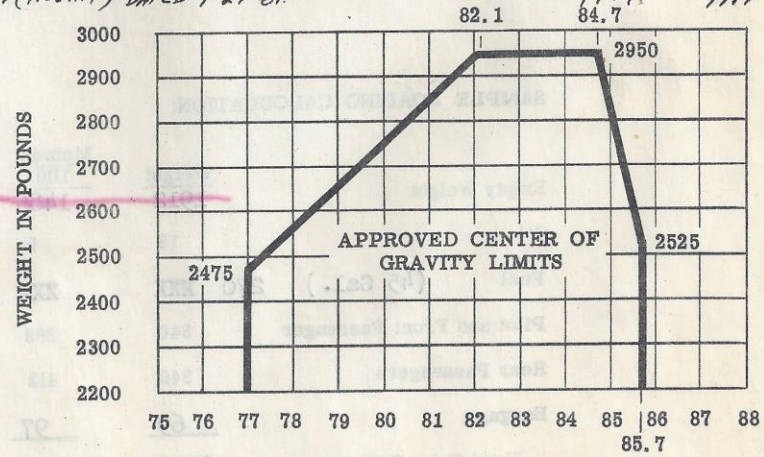

It is the responsibility of the airplane owner and pilot to insure that the airplane is loaded properly. The empty weight and empty weight cg, are noted hereon for this airplane as delivered from the factory. If the airplane has been altered, refer to the latest approved Repair and Alteration Form ACA-337 for this information.

90-532

BEECHCRAFT K35 BONANZA WEIGHT AND BALANCE
PAGE 2 - USEFUL LOAD WEIGHTS AND MOMENTS

FUEL

MAIN WING TANKS

Gallons	Weight	Moment 100
5	30	22
10	60	45
15	90	68
20	120	90
25	150	112
30	180	135
35	210	158
40	240	180
45	270	203
49	294	221

AUXILIARY WING TANKS

Gallons	Weight	Moment 100
5	30	28
10	60	56
15	90	85
19	114	107

OIL

Quarts	Weight	Moment 100
10	19	5

OCCUPANTS

FRONT SEATS

Weight	Moment 100
120	102
130	110
140	119
150	128
160	136
170	144
180	153
190	162
200	170

REAR SEATS

Weight	Moment 100
120	145
130	157
140	169
150	182
160	194
170	206
180	218
190	230
200	242

BAGGAGE

Weight	Moment 100	Weight	Moment 100
10	14	150	210
20	28	160	224
30	42	170	238
40	56	180	252
50	70	190	266
60	84	200	280
70	98	210	294
80	112	220	308
90	126	230	322
100	140	240	336
110	154	250	350
120	168	260	364
130	182	270	378
140	196		

CARGO (With Rear Seats Removed)

Ahead of Spar

Weight	Moment 100
20	22
40	43
60	65
80	86
100	108
120	130
140	151
160	173
180	194
200	216

Aft of Spar

Weight	Moment 100
20	27
40	54
60	81
80	108
100	135
120	162
140	189
160	216
180	243
200	270
220	297
240	324
260	351
270	364

SAMPLE LOADING CALCULATION:

	Weight	Moment 100
Empty Weight	~~1912~~	~~1486~~ Superseded, see 337 Rev. #1 dated 9-27-61
Oil	19	5
Fuel (45 Gal.) 270	XXX	XXX 203
Pilot and Front Passenger	340	288
Rear Passengers	340	412
Baggage	69	97
Total Takeoff Weight	~~2950~~	~~2491~~
Use 25 Gallons of Fuel	-150	-112
Total Landing Weight	~~2800~~	~~2379~~

BEECHCRAFT K35 BONANZA WEIGHT AND BALANCE
PAGE 3 - CENTER OF GRAVITY TABLE

Weight	Minimum Moment 100	Maximum Moment 100	Weight	Minimum Moment 100	Maximum Moment 100	Weight	Minimum Moment 100	Maximum Moment 100
2100	1617	1800	2400	1848	2057	2700	2144	2303
2110	1625	1808	2410	1856	2065	2710	2155	2311
2120	1632	1817	2420	1863	2074	2720	2166	2319
2130	1640	1825	2430	1871	2083	2730	2177	2326
2140	1648	1834	2440	1879	2091	2740	2188	2334
2150	1656	1843	2450	1887	2100	2750	2199	2342
2160	1663	1851	2460	1894	2108	2760	2210	2350
2170	1671	1860	2470	1902	2117	2770	2221	2358
2180	1679	1868	2480	1911	2125	2780	2232	2366
2190	1686	1877	2490	1921	2134	2790	2243	2374
2200	1694	1885	2500	1932	2143	2800	2254	2381
2210	1702	1894	2510	1942	2151	2810	2265	2389
2220	1709	1903	2520	1953	2160	2820	2276	2397
2230	1717	1911	2530	1963	2168	2830	2287	2405
2240	1725	1920	2540	1974	2176	2840	2298	2413
2250	1733	1928	2550	1984	2184	2850	2309	2421
2260	1740	1937	2560	1995	2192	2860	2320	2428
2270	1748	1945	2570	2005	2200	2870	2332	2436
2280	1756	1954	2580	2016	2208	2880	2343	2444
2290	1763	1963	2590	2026	2216	2890	2354	2452
2300	1771	1971	2600	2037	2224	2900	2365	2460
2310	1779	1980	2610	2048	2232	2910	2377	2468
2320	1786	1988	2620	2058	2239	2920	2388	2475
2330	1794	1997	2630	2069	2247	2930	2399	2483
2340	1802	2005	2640	2080	2255	2940	2411	2491
2350	1810	2014	2650	2090	2263	2950	2422	2499
2360	1817	2023	2660	2101	2271			
2370	1825	2031	2670	2112	2279			
2380	1833	2040	2680	2123	2287			
2390	1840	2048	2690	2133	2295			

INSTRUCTIONS

The Weight and Balance information is arranged for the airplane operator to secure the best possible loading of his K35 Bonanza with a minimum amount of computation. The empty weight and center of gravity of this airplane is shown on Page 1 (or on the latest CAA Form ACA-337 if the airplane has been altered). To calculate a loading, copy the current empty weight and moment/100. (All moments are divided by 100 for mathematical convenience.) Then add the useful load items to be carried to the empty weight. The total weight at takeoff must not exceed 2950 pounds and the total moment/100 must be between the limits in the Center of Gravity Table above. Then remove fuel as it would be used for the intended flight and check the total moment again to be sure it has remained within the limits for the landing condition. A sample loading calculation is shown on Page 2.

Serial D-6107

Registration N6097E

Date 9-2-59

X - Installed in Airplane

O - Not Installed in Airplane

	Item No.		Weight	Arm
X	3.	Beech Constant Speed Propeller		
		(a) Hub 278-100-7, Blades 278-214-82	69	1
X		(b) Woodward hydraulic governor 210235	3	10
O	or 4.	Beech Constant Speed Propeller		
		(a) Hub 278-100-7, Blades 278-213-82	73	1
O		(b) Woodward hydraulic governor 210235A	3	10
X	101.	Fuel Pumps		
		(d) Engine Driven - Continental Motors 626062 or 626062-1 or 626062-2	2	39
X		(e) Weldon 4020-A-1-A or 4020-A-2-A or 4032-A	3	74
X	102.	Oil Radiator		
		(a) Harrison 8524295 (Continental Motors 625093)	5	11
	or	(b) Harrison 8528220 (Continental Motors 627392)	5	11
X	103.	Carburetor Air Cleaner	1	10
X	104.	Vacuum Pump		
		(a) Aro A513-DB or Pesco 3P-194F or Garwin G450 or Garwin G455	4	41
X	105.	Starter		
		(a) Delco Remy 1109471 (Continental Motors 535856)	13	39
	or	(b) Delco Remy 1109678 (Continental Motors 626960)	13	39
	or	(c) Delco Remy 1109681	13	39
	or	(d) Delco Remy 1109684	13	39
X	106.	Two 10-Gallon Auxiliary Wing Fuel Tanks	18	94
O	201.	Two main wheel-brake assemblies, 6.50-8, Type III		
		(a) Goodyear Model L6.50-8HBDM or L6.50-8HBM Wheel Assembly No. 530869M or 9530949 Brake Assembly No. 511731M	21	97
X	or	(b) Goodyear PD931 6.50-8, Type III Wheel assembly No. 9532135 Brake assembly No. 9532167	25	97
O	202.	(a) Two main wheels 4-ply or 6-ply rating tires, 6.50-8, with regular tubes	23	97
X	or	(b) Two main wheel 6.50-8, side inflatable 4 or 6 ply rating tubeless tires used only with Item 201.(b)	21	97
O	205.	One nose wheel, 5.00-5		
		(a) Goodyear Model L5NBM or L5NBD or Firestone Model DFA531-1 or Goodrich 3-897	3	12
X	or	(b) Goodyear 9532102	4	12
O	206.	(a) One nose wheel 4-ply rating tire, 5.00-5, with regular tube	7	12
X	or	(b) One nose wheel 5.00-5, side inflatable 4 ply rating tubeless tire used only with Item. 205.(b)	5	12

	Item No.		Weight	Arm
X	301.	Generator		
		(b) 50 amp., Continental Motors 626380 or Delco Remy 1101909	16	37
X	302.	Battery		
		(a) 12 volt, 33-amp-hr	28	54
X	303.	Landing Lights		
		(a) General Electric 4522	1 ea	72
X	304.	Voltage Regulator		
		(a) Delco Remy 1118713	2	48
	or	(b) Delco Remy 1119224C	2	48
X	403.	DMCR Approved Airplane Flight Manual		
		(e) Model K35 dated October 29, 1958		
X	404.	Air conditioner installation (including water)	18	148
X	601.	Stall warning indicator installation		
		(a) Safe Flight - Beech drawing 35-361025		
O	602.	Heated Pitot Head		
		(a) Beech drawing 35-361100	1	74
X	603.	Aileron Trimmer Control	1	73
O	604.	Optional Fifth Seat	17	135
		MISCELLANEOUS		
		Instruments, Extra		
O		Directional Gyro	4	66
O		Attitude Gyro	3	66
O		Horizon Gyro	4	66
X		Headrest (1)	1	100
X		Rear Seat	43	126
X		Cabin Speaker	2	102
X		Rotating Beacon Light	2	182

ADDITIONAL EQUIPMENT

Radio Equipment (See Page 5)